INSTALLATION GUIDE Beam Antenna RST714B

Beam Antenna RST714B
Satellite Communications Cellular Antenna
1616-1626MHz

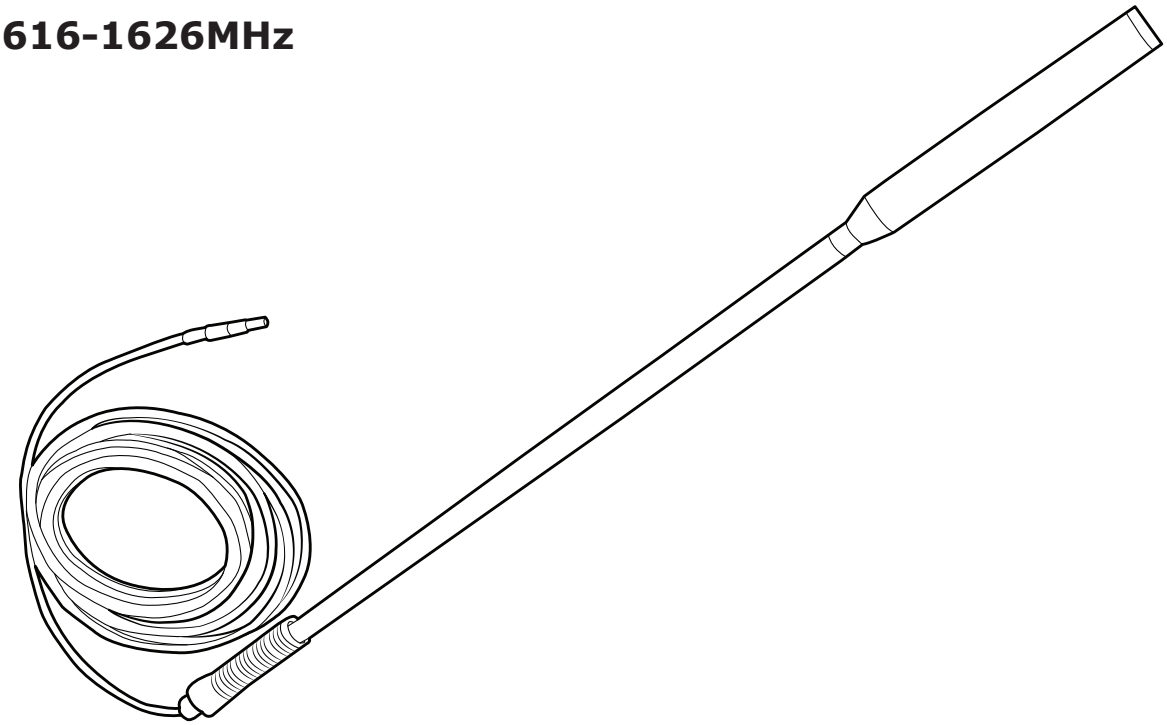

ANTENNA DESCRIPTION

The RST714B satellite communications antenna is a popular choice for good reasons:

- Improves signal strength for satellite phones
- Robust construction ensuring a long service life.

The antenna mounts easily into any bracket with 12.7 mm (½") minimum diameter hole and is secured firmly by the nut and washer at the base of the spring assembly.

The high quality electro-polished stainless-steel straight spring dampens vibrations while travelling.

5 meters of LMR240UF low loss stranded cable bottom exits from the spring assembly. A TNC male connector is fitted to the cable for easy installation.

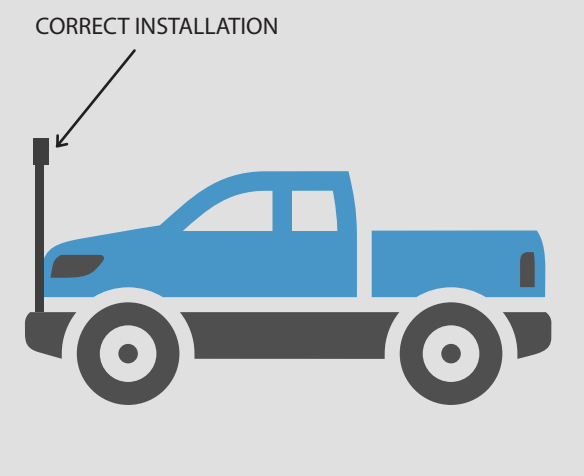

Recommended for a vehicle bull bar or fixed location mounting

Mounts into any bracket with minimum 12.7 mm (½") diameter hole.
5 meters of LMR240UF low loss stranded cable. TNC male connector fitted to the CABLE.

Selecting the Mounting Position

No metal ground plane is necessary for the antenna to operate effectively.

The typical mounting position for this antenna is to your vehicle bull bar, although the guard or boot are other potential mounting points using the appropriate bracket with 12.7 mm (½") minimum diameter hole. The antenna can also be mounted in locations other than on a vehicle.

Selecting the mounting position cont...

To achieve best performance from your antenna, these are the important principles you should consider when selecting the mounting point:

1. Mount the antenna in as high a place as possible.
2. Mount the antenna as far away from other antennas and metallic objects as possible to avoid distortion of the 360° omnidirectional pattern and interference.
3. Mount the antenna vertical, not at an angle.

Remove the split nut from the base of the spring. Insert the thread at the base of the spring through the hole of your mounting bracket. Screw the split nut onto the thread of the straight spring. Tighten the nut to firmly secure the antenna to the bracket.

Installing Antenna Cables

When installing antenna cables, follow these guidelines:

- Route and restrain cables to prevent them from vibrating or moving under normal conditions, which could result in damage to the antenna or the coaxial cable connections.
- Wherever the cables contact structures, protect the cables from chafing or abrasion. If a cable needs to be bent, avoid kinking it, and ensure that each bend radius follows the cable supplier limits.
- Use coaxial sealant, shrink-wrap tubing, electrical tape, or another suitable product to seal all cable connections appropriately to prevent moisture and corrosion damage from weather exposure.

IMPORTANT: Leave some slack in the caable at the point where the cable exits the spring base. This will allow the antenna to flex inthe usual manner during travel without placing unecessary tension on the cable.

- Route the LMR240UF low loss stranded cable carefully to your device. Ensure that the cable is not stretched excessively and there are no sharp kinks. Insert the TNC male connector into your device.

IMPORTANT INFORMATION

The antenna system is suitable for vehicle and fixed applications and is designed to meet Iridium System performance requirements when installed according to the instructions in this guide.

To ensure maximum performance of the antenna system and to maximize availability and reliability of service the antenna must;

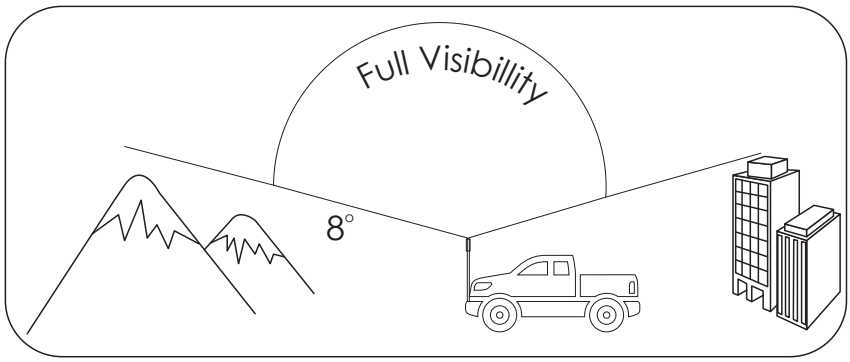

- have a clear line of site to the sky
- be clear and free of obstructions
- be clear of metal objects
- be located away from other transmitting devices
- be securely affixed in location
- not be located indoors
- The cable attached is not be altered / modified in anyway.